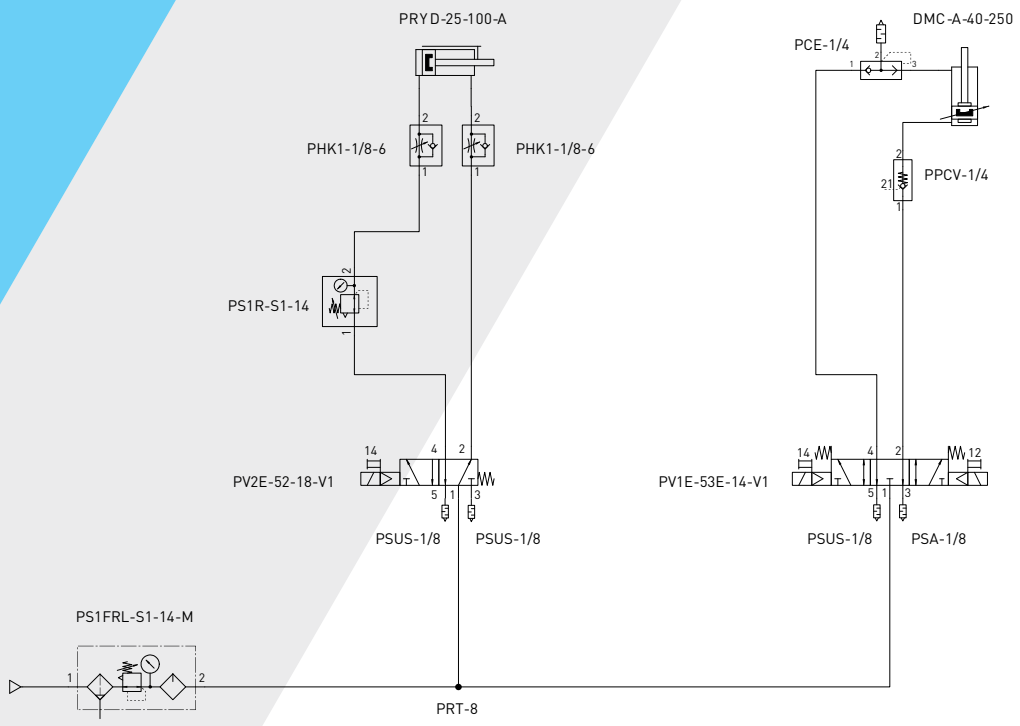

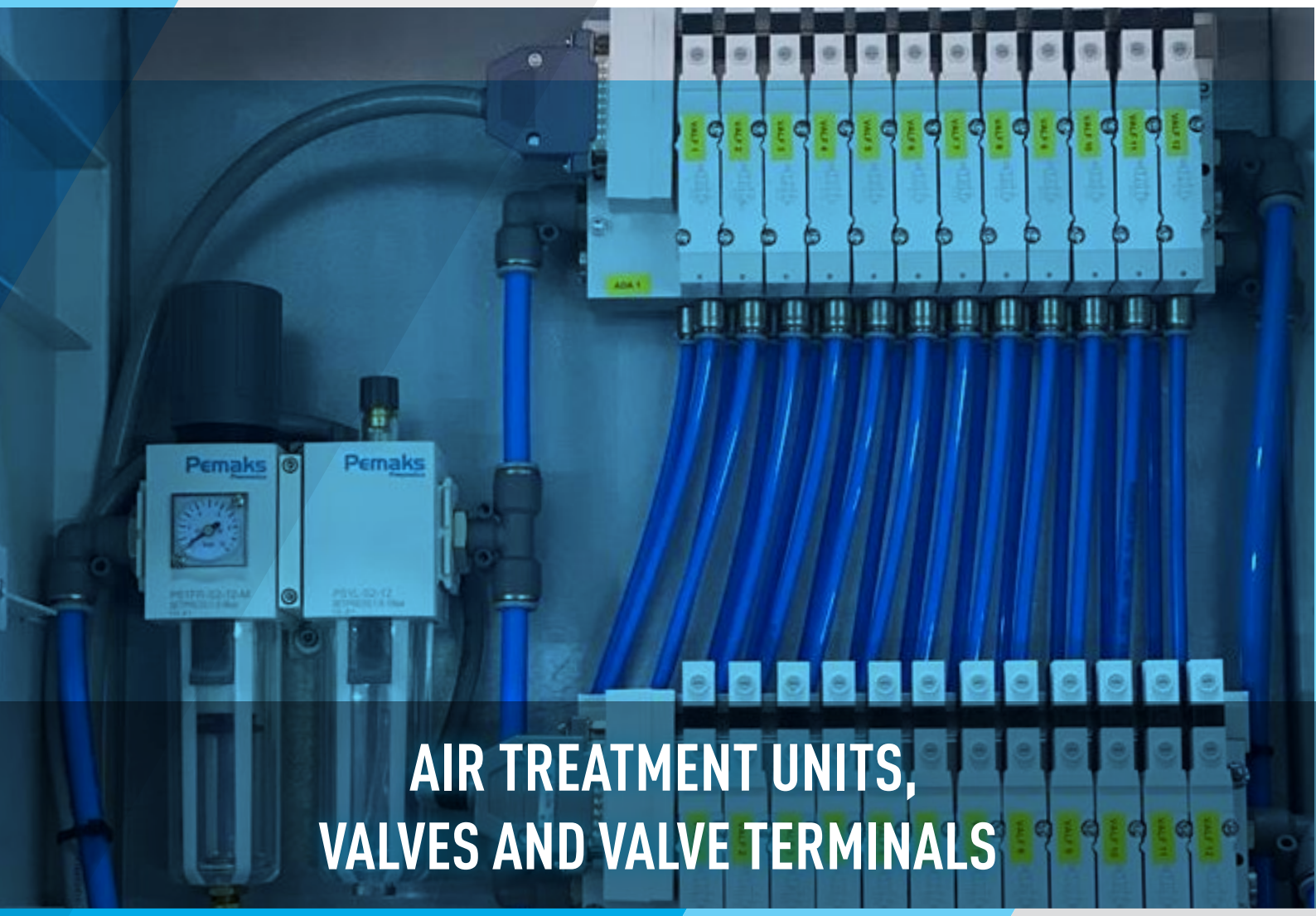

AIR TREATMENT UNITS, VALVES AND VALVE TERMINALS

ONE BRAND, COMPLETE SOLUTIONS
IN PNEUMATIC AUTOMATION

Pemaks® Pneumatics
pemaks.com.tr

YOUR AIR, AS YOU WISH

WITH NEW PEMAKS AIR TREATMENT UNITS

SUPERIOR PROTECTION AGAINST EXTERNAL FACTORS

- High Operating Performance
- Long Service Life
- High Flow Capacity
- Robust Body Structure
- Assembly Bracket Included

PS1-FRL SERIES

FILTER-REGULATOR-LUBRICATOR

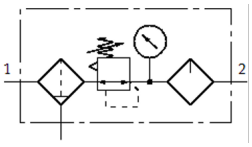

Sample Coding PS1-FRL-S1-12-M

PS1-	FRL-	S1-	12-	M
Series	**Product Type**	**Size**	**Thread**	**Drain**
PS1	FRL	S1	1/4''	M= Manual
		S2	1/2''	A= Automatic
		S3	3/4"	

	Product Code		
	PS1-FRL-S1-14-M/A	PS1-FRL-S2-12-M/A	PS1-FRL-S3-34-M/A
General Technical Information			
Thread Dimension	1/4''	1/2''	3/4"
Standard Flow Rate 6 Bar (l/min.)	1250	2500	6400
Maximum Operating Pressure (Bar)	10		
Operating Temperature (°C)	-5... +60		
Pressure Regulation Range (Bar)	0,2...10		
Filter Options(µm)	40 / 5		
Product Material	Polycarbonate		
Filter Bowl Capacity (cm³)	14	45	82
Oil Bowl Capacity (cm³)	28	70	175
Product Weight (g)	396	570	1590

STANDARD FLOW GRAPH

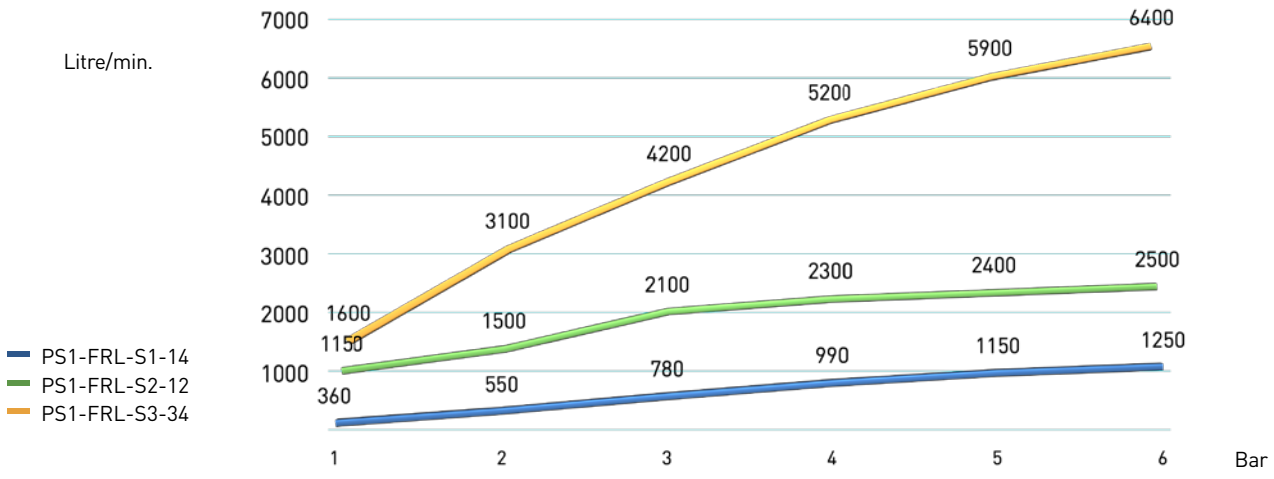

DIMENSIONS (mm)

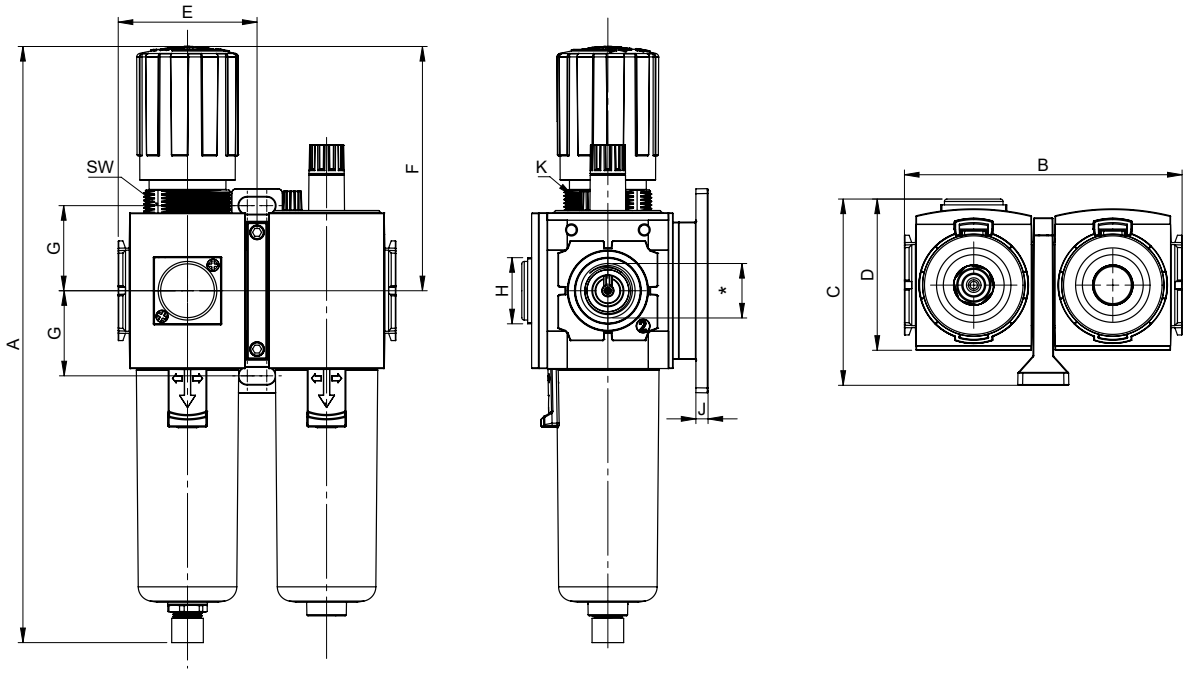

MODEL	*	A	B	C	D	E	F	G	H	J	Z	SW
PS1-FRL- S1	1/4"	171,2	86	61,6	50,6	43	68,6	24	28	5	M30,5x1,5	-
PS1-FRL- S2	1/2"	239,6	114	75,8	61,6	57	96,6	35	28	5	M35,5x1,5	34
PS1-FRL- S3	3/4"	270,2	160	95	81,8	80	105,4	40	28	7	M51,5x1,5	50

PS1-FR SERIES

FILTER REGULATOR

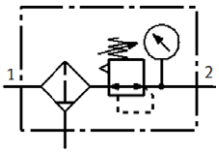

- Robust Body Structure
- Protected Bowl Design
- Shielded Type Manometer
- Reliable Pressure Setting
- 40 µm and 5 µm Filter Cartridge Options
- Manual and Automatic Drain Options
- Assembly Bracket Included

Sample Order PS1-FR-S1-12-M

PS1-	FR-	S1-	12-	M
Series	**Product Type**	**Size**	**Thread**	**Drain**
PS1	FR	S1	1/4''	M= Manual
		S2	1/2''	A= Automatic
		S3	3/4"	

Product Code

	PS1-FR-S1-14-M/A	PS1-FR-S2-12-M/A	PS1-FR-S3-34-M/A
General Technical Information			
Thread Dimension	1/4''	1/2''	3/4"
Standard Flow Rate 6 Bar (l/min.)	1400	2850	6600
Maximum Operating Pressure (Bar)	10		
Operating Temperature (°C)	-5... +60		
Pressure Regulation Range (Bar)	0,2.....10		
Filter Options (µm)	40 / 5		
Product Material	Polycarbonate		
Filter Bowl Capacity (cm³)	14	45	82
Product Weight (g)	202	485	880

STANDARD FLOW GRAPH

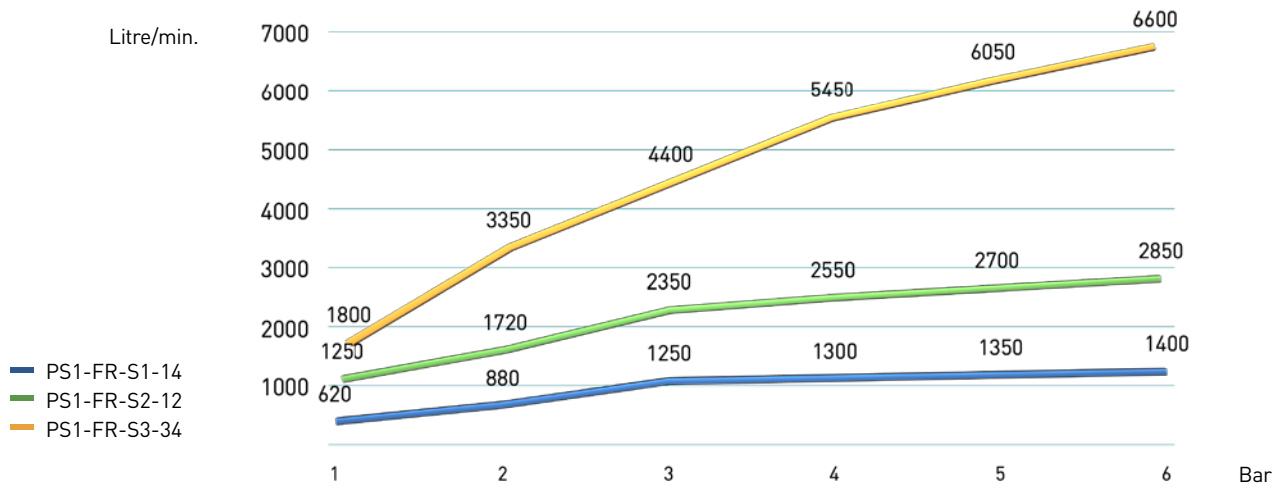

DIMENSIONS (mm)

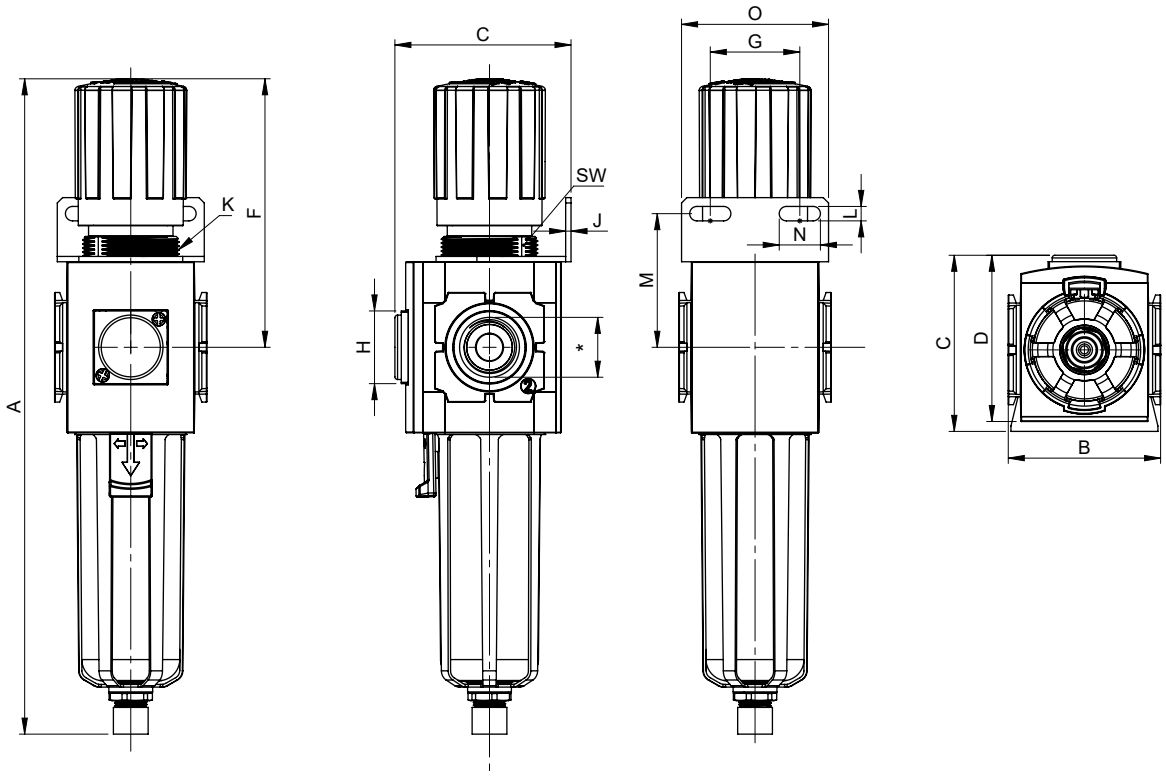

MODEL	*	A	B	C	D	F	G	H	J	K	L	M	N	O	SW	Z	SW
PS1-FR-S1	1/4"	171,2	43	61,6	50,6	68,6	34	28	2	M30,5x1,5	5,5	39	15,5	55	-	M30,5x1,5	-
PS1-FR-S2	1/2"	239,6	57	75,8	61,6	96,6	36	28	2	M35,5x1,5	6,5	50	24	65	34	M35,5x1,5	34
PS1-FR-S3	3/4"	270,2	80	95	81,8	105,4	38	28	2,5	M51,5x1,5	8,5	53	28	72	50	M51,5x1,5	50

PS1-R SERIES

REGULATOR

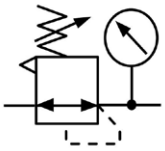

- Robust Body Structure
- Shielded Type Manometer
- Reliable Pressure Setting
- Assembly Bracket Included

Sample Order PS1-R-S1-12

PS1-	R-	S1-	12
Series	**Product Type**	**Size**	**Thread**
PS1	R	S1	1/4''
		S2	1/2''
		S3	3/4''

Product Code

	PS1-R-S1-14	PS1-R-S2-12	PS1-R-S3-34
General Technical Information			
Thread Dimension (")	1/4''	1/2''	3/4''
Standard Flow Rate 6 Bar (l / min.)	1400	2850	6600
Maximum Operating Pressure (Bar)	10		
Operating Temperature (°C)	-5...+60		
Pressure Regulation Range (Bar)	0,2...10		
Product Material	Polycarbonate		
Product Weight (g)	158	390	695

STANDARD FLOW GRAPH

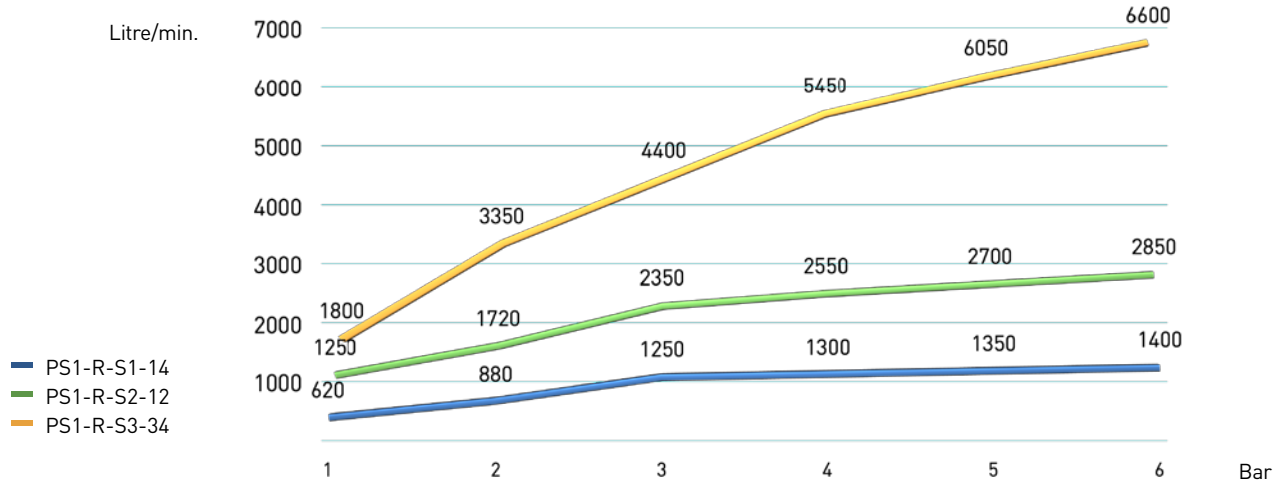

DIMENSIONS (mm)

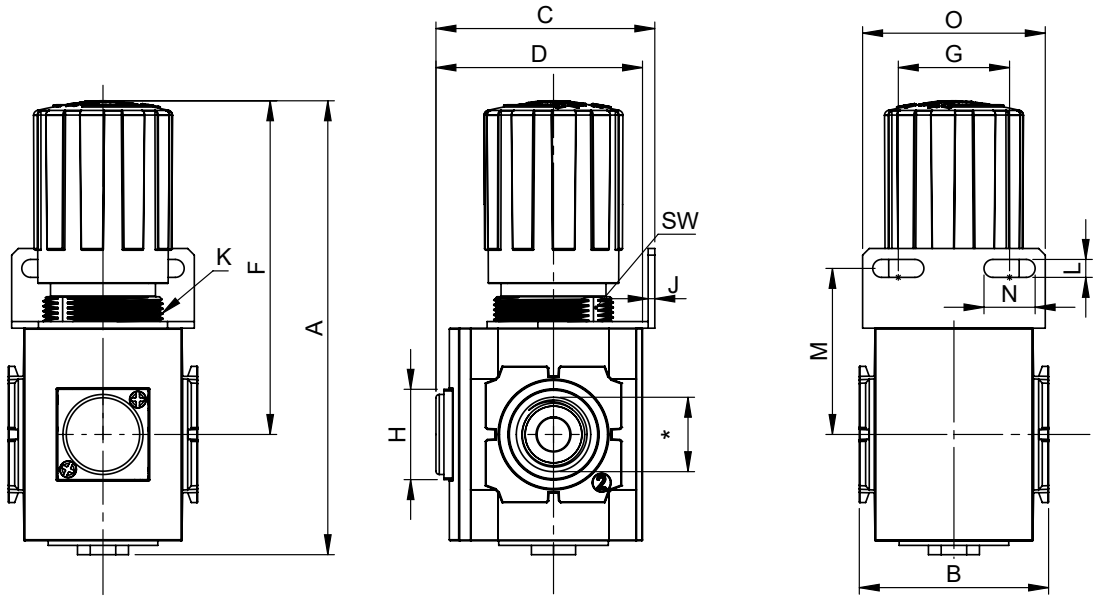

MODEL	*	A	B	C	D	F	G	H	J	K	L	M	N	O	SW
PS1-R-S1	1/4"	96,3	43	61,6	50,6	68,6	34	28	2	M30,5x1,5	5,5	39	15,5	55	-
PS1-R-S2	1/2"	129,1	57	75,8	61,6	96,6	36	28	2	M35,5x1,5	6,5	50	24	65	34
PS1-R-S3	3/4"	141,6	80	95	81,8	105,4	38	28	2,5	M51,5x1,5	8,5	53	28	72	50

PS1-L SERIES
LUBRICATOR

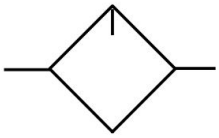

- Robust Body Structure
- Protected Bowl Design
- Precise Lubrication Setting
- Assembly Bracket Included
- Ease of Adding Oil from Inlet on Body

Sample Order: PS1-L-S1-12

PS1-	L-	S1-	12
Series	**Product Type**	**Size**	**Thread**
PS1	L	S1	1/4''
		S2	1/2''
		S3	3/4"

Product Code

	PS1-L-S1-14	PS1-L-S2-12	PS1-L-S3-34
General Technical Information			
Thread Dimension (")	1/4''	1/2''	3/4"
Standard Flow Rate 6 Bar (l / min.)	1700	2100	6100
Maximum Operating Pressure (Bar)	10		
Operating Temperature (°C)	-5...+60		
Product Material	Polycarbonate		
Oil Bowl Capacity (cm³)	28	70	175
Product Weight (g)	120	290	540

STANDARD FLOW GRAPH

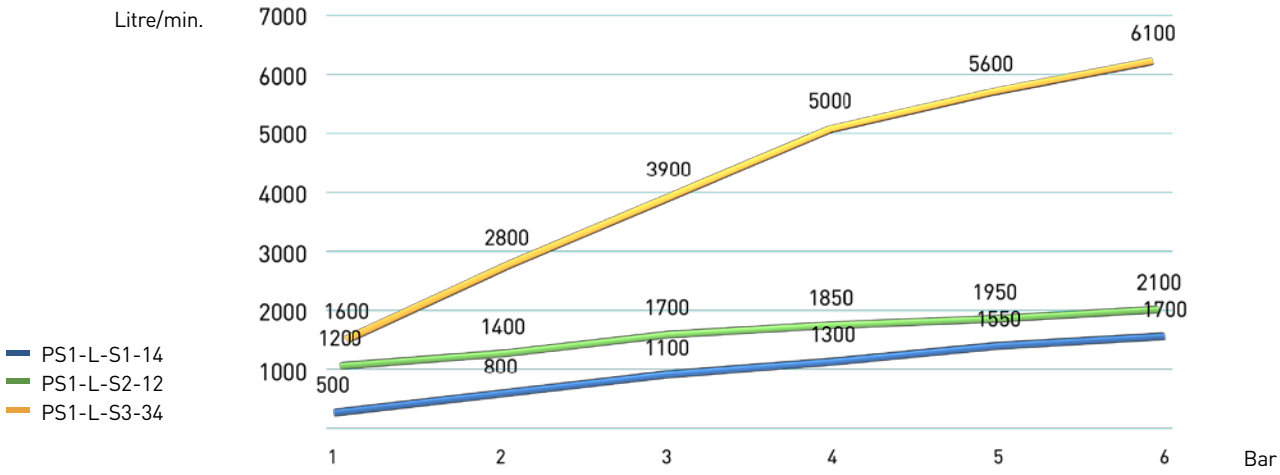

DIMENSIONS (mm)

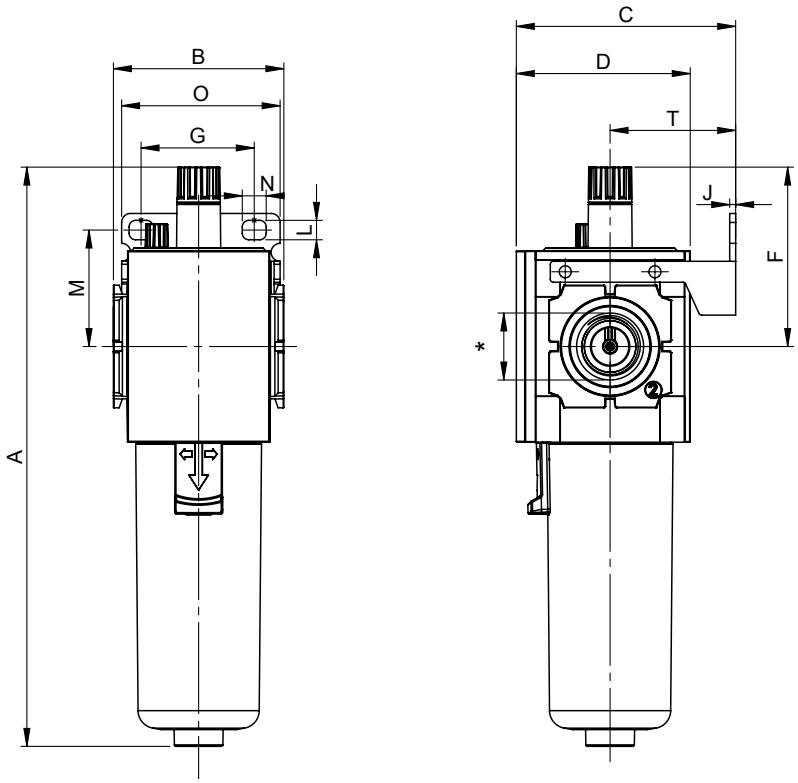

MODEL	*	A	B	C	D	F	G	J	L	M	N	T	O
PS1-L-S1	1/4"	147,9	43	52,4	41	64	27	2	5,5	31	8,4	30	40
PS1-L-S2	1/2"	188	57	72,4	58,2	91,2	40	2	6,5	41	8	41	53
PS1-L-S3	3/4"	216,5	80	92,1	78,9	114,9	54	2,5	8,5	44	12	50	73

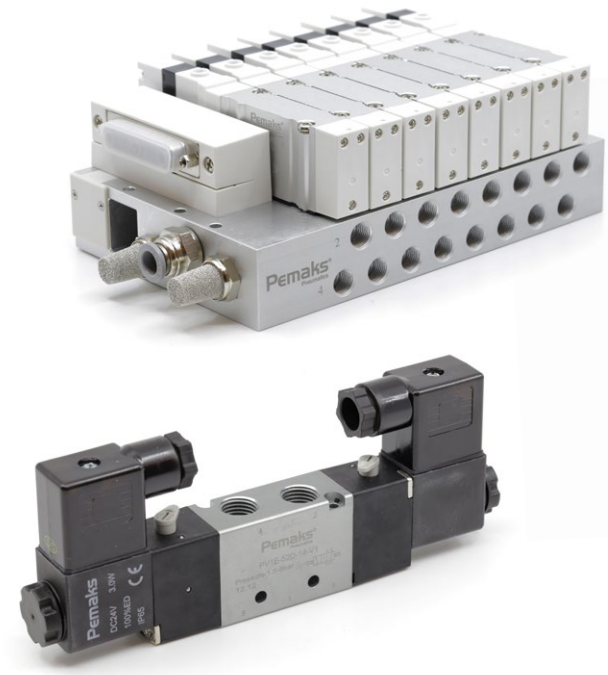

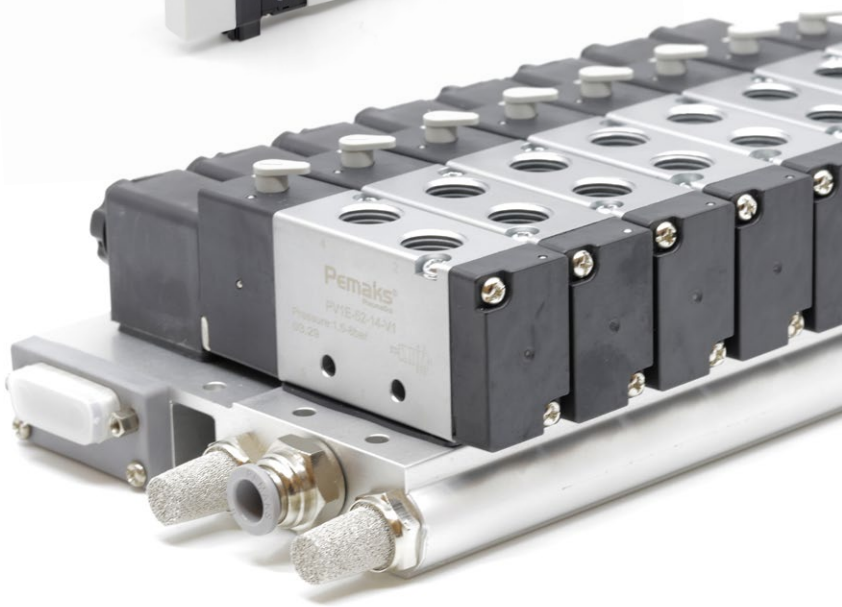

GENUINE CONTROL, EXCELLENT HARMONY

SUPERIOR FEATURES THAT YOU ARE LOOKING FOR IN THE CONTROL OF YOUR PNEUMATIC SYSTEMS, NOW AT YOUR SERVICE WITH **KNOWN PEMAKS QUALITY.**

OUR NEW VALVE RANGE **EASES CONTROL OF YOUR SYSTEMS AND INCREASES EFFICIENCY.**

PV1 SERIES

VALVES

- Robust Body Structure
- Energy Saving with Low Power Consumption
- Long Lifetime with Special Coil Design
- Stability and Durability with Air&Spring Pilot Signal
- Body Compatible with Individual Use and Valve Terminal Connection
- Assembled with Coil and Led Indicator Socket

Sample Coding

PV1-	E	52D-	12-	V1
Product Series	**Signal Type**	**Function**	**Thread**	**Voltage**
PV1	E=Electrical	32NC= 3/2 Normally Closed	18= 1/8"	V1= 24 V DC
	H=Air	32NO= 3/2 Normally Open	14= 1/4"	V2= 110 V AC
	M=Mechanical	52= 5/2 Single Coil	12= 1/2"	V3=220 V AC
		52D= 5/2 Double Coil		V4= 12 V DC
		53C= 5/3 Closed Center		V5= 24 V AC
		53E= 5/3 Exhaust Center		
		53P= 5/3 Pressure Center		

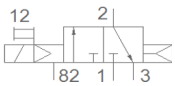

3/2 Normally Closed Valve

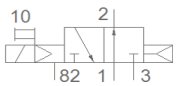

3/2 Normally Open Valve

PV1 SERIES

3/2 VALVES

	PV1E-32NC/NO-18-V1	PV1E-32NC/NO-14-V1	PV1E-32NC/NO-12-V1
General Technical Information			
Power Rating	3.0 W	3.0 W	3.0 W
Pilot Signal Type	Air	Air	Air / Spring
Maximum Operating Pressure(Bar)		12	
Operating Temperature (°C)		-20 ...+80	
Operating Pressure (Bar)		1,5...8	
Recommended Air Quality (µm)		40	
Protection Class		IP65	
Cycle Frequency (s)		6 Cycles	
Activation Time (s)		0,08	
Product Weight (g)	115	300	460

STANDARD FLOW GRAPH

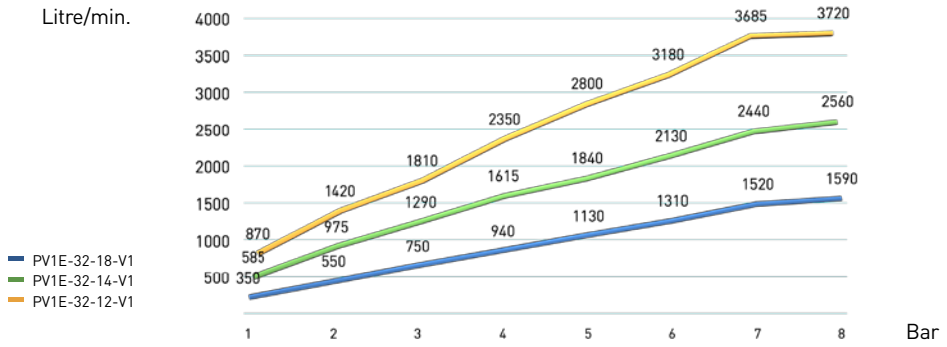

DIMENSIONS (mm)

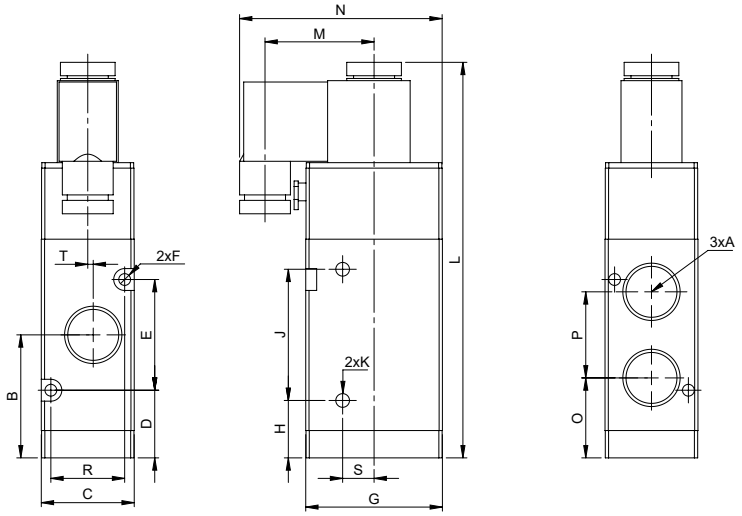

MODEL	A	B	C	D	E	F	G	H	J	K	L	M	N	O	P	R	S	T
PV1E-32-18-V1	G1/8"	31	22	16	30	3,3	35	18,5	25	4,2	112,7	40,2	66,7	20	22	17	9,3	0
PV1E-32-14-V1	G1/4"	36,6	27	19,1	35	4,3	40	21,6	30	4,3	124,3	40,2	69,2	24,6	24	20	9,5	0
PV1E-32-12-V1	G1/2"	45	34	24,8	40,5	4,3	50	21	48	5,2	144,7	40,2	74,2	29,3	31,5	27	11,5	2

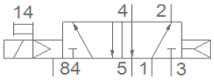

PV1 SERIES

5/2 SINGLE SOLENOID VALVE

Product Code

	PV1E-52-18-V1	PV1E-52-14-V1	PV1E-52-12-V1
General Technical Information			
Power Rating (W)	2.8 W	3.0 W	3.0 W
Pilot Signal Type	Air	Air	Air / Spring
Maximum Operating Pressure	12 Bar		
Operating Temperature (°C)	-20°C .....+80°C		
Operating Pressure (Bar)	1,5...8		
Recommended Air Quality (µm)	40		
Protection Class	IP65		
Cycle Frequency (s)	6 Cycles		
Activation Time	0,08 S		
Product Weight (g)	120	210	520

STANDARD FLOW GRAPH

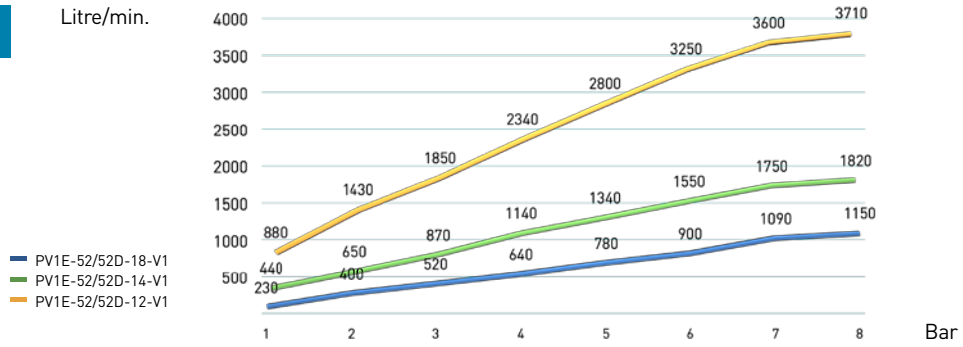

DIMENSIONS (mm)

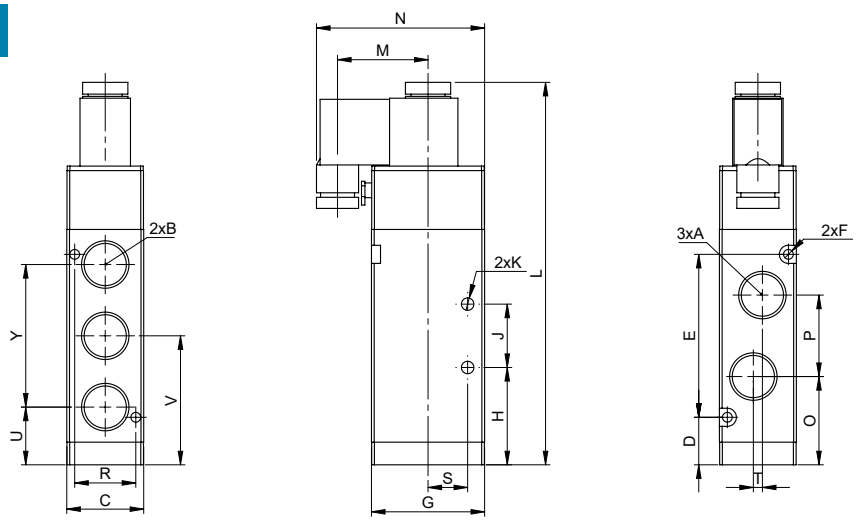

MODEL	A	B	C	D	E	F	G	H	J	K	L	M	N	O	P	R	S	T	U	V	Y
PV1E-52-18-V1	G1/8"	G1/8"	18	16,5	30	3,3	27	24,5	14	3,3	103,1	33,9	55,2	23,5	16	13	9,5	3	17,5	31,5	28
PV1E-52-14-V1	G1/4"	G1/8"	22	16	38	3,3	35	25	20	4,3	120,7	40,2	66,7	24,5	21	17	10,5	3	17	35	36
PV1E-52-12-V1	G1/2"	G1/2"	34	21	72	4,3	50	43	28	5,5	168,7	40,2	74,2	39	36	27	17,5	4	25,5	57	63

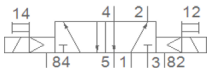

PV1 SERIES

5/2 DOUBLE SOLENOID VALVE

Product Code

	PV1E-52D-18-V1	PV1E-52D-14-V1	PV1E-52D-12-V1
General Technical Information			
Power Rating	2.8 W	3.0 W	3.0 W
Pilot Signal Type	Air	Air	Air / Spring
Maximum Operating Pressure	12 Bar		
Operating Temperature (°C)	-20°C .....+80°C		
Operating Pressure (Bar)	1,5...8		
Recommended Air Quality (µm)	40		
Protection Class	IP65		
Cycle Frequency (s)	6 Cycles		
Activation Time	0,08 S		
Product Weight (g)	170	310	670

STANDARD FLOW GRAPH

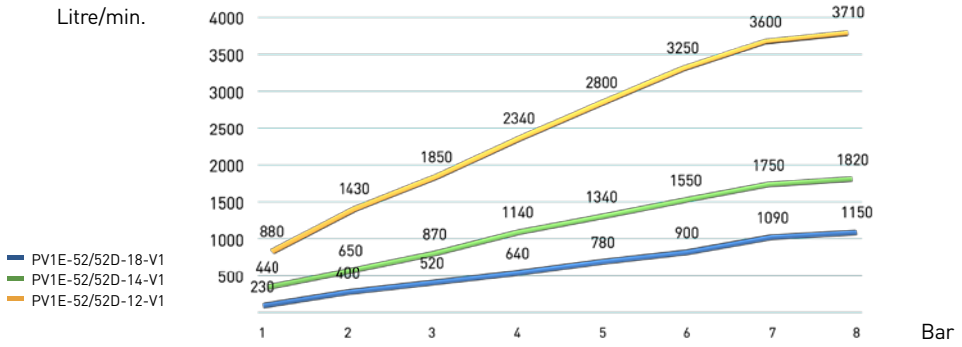

DIMENSIONS (mm)

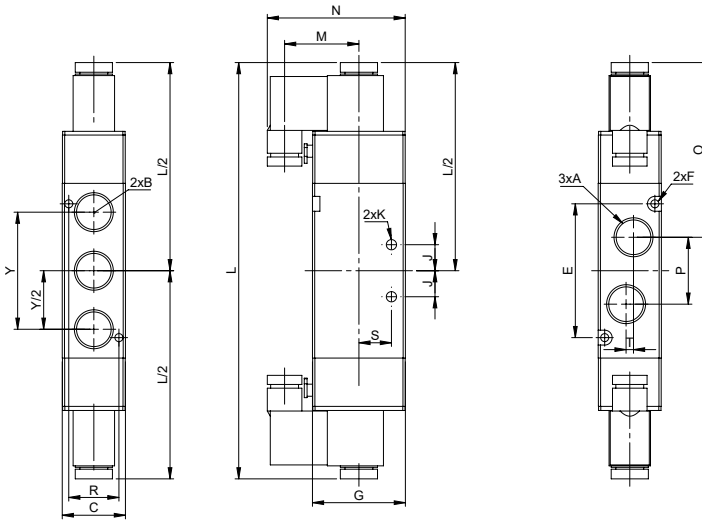

MODEL	A	B	C	E	F	G	J	K	L	M	N	O	P	R	S	T	Y
PV1E-52D-18-V1	G1/8"	G1/8"	18	30	3,3	27	7	3,3	143,2	33,9	55,2	63,6	16	13	9,5	3	28
PV1E-52D-14-V1	G1/4"	G1/8"	22	38	3,3	35	10	4,3	171,4	40,2	66,7	75,2	21	17	10,5	3	36
PV1E-52D-12-V1	G1/2"	G1/2"	34	72	4,3	50	14	5,5	223,4	40,2	74,2	93,7	36	27	17,5	4	63

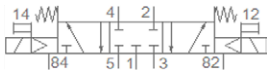

5/3 Closed Center Valve

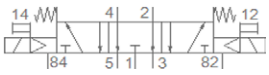

5/3 Exhaust Center Valve

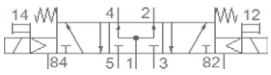

5/3 Pressure Center Valve

PV1 SERIES

5/3 VALVES

Product Code

	PV1E-53C/E/P-18-V1	PV1E-53C/E/P-14-V1	PV1E-53C/E/P-12-V1
General Technical Information			
Power Rating	3.0 W	3.0 W	3.0 W
Pilot Signal Type	Air	Air	Air / Spring
Maximum Operating Pressure	12 Bar		
Operating Temperature (°C)	-20°C .....+80°C		
Operating Pressure (Bar)	1,5...8		
Recommended Air Quality (µm)	40		
Protection Class	IP65		
Cycle Frequency (s)	4 Cycles		
Activation Time	0,08 S		
Product Weight (g)	195	360	770

STANDARD FLOW GRAPH

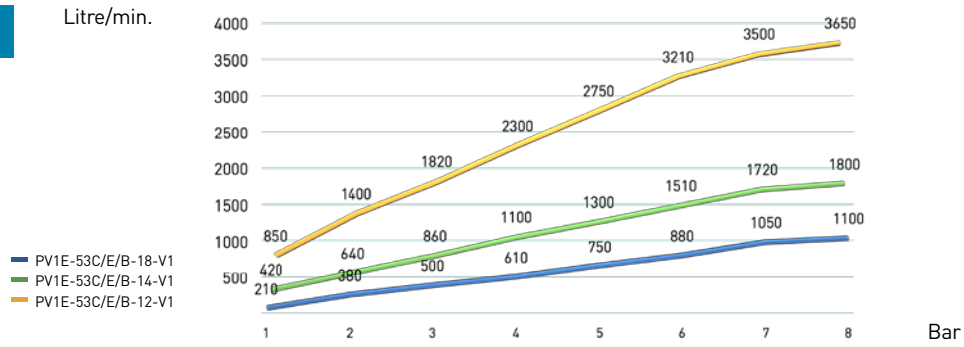

DIMENSIONS (mm)

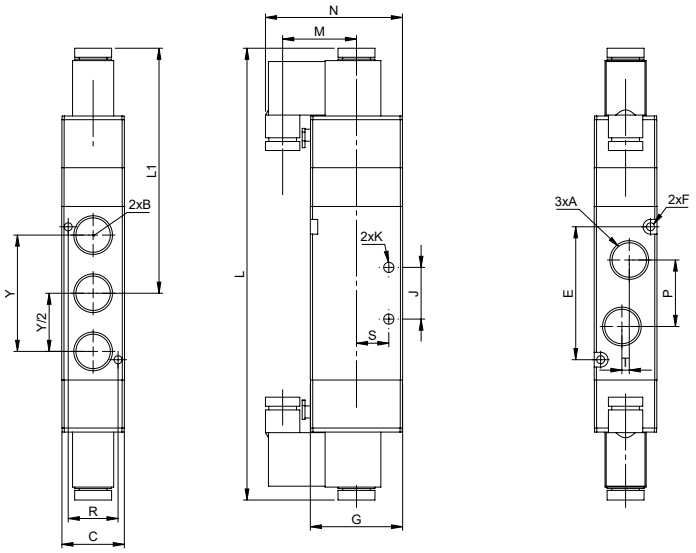

MODEL	A	B	C	E	F	G	J	K	L	L1	M	N	O	P	R	S	T	Y
PV1E-53C-18-V1	G1/8"	G1/8"	18	30	3,3	27	7	3,3	143,2	86,1	33,9	55,2	63,6	16	13	9,5	3	28
PV1E-53C-14-V1	G1/4"	G1/8"	22	38	3,3	35	10	4,3	171,4	104,4	40,2	66,7	75,2	21	17	10,5	3	36
PV1E-53C-12-V1	G1/2"	G1/2"	34	72	4,3	50	14	5,5	223,4	133	40,2	74,2	93,7	36	27	17,5	4	63

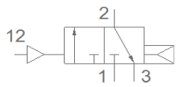

3/2 Normally Closed Air Signal Valve

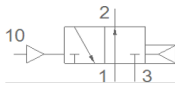

3/2 Normally Open Air Signal Valve

PV1 SERIES

3/2 AIR SIGNAL VALVES

Product Code

	PV1H-32NC/NO-18	PV1H-32NC/NO-14	PV1H-32NC/NO-12
General Technical Information			
Power Rating	3.0	3.0	3.0
Pilot Signal Type	Air	Air	Air / Spring
Maximum Operating Pressure		12	
Operating Temperature (°C)		-20 ...+80	
Operating Pressure (Bar)		1,5...8	
Recommended Air Quality (µm)		40	
Protection Class		IP65	
Cycle Frequency (s)		6 Cycles	
Activation Time		0,08	
Product Weight (g)	115	300	460

Standard Flow Graph

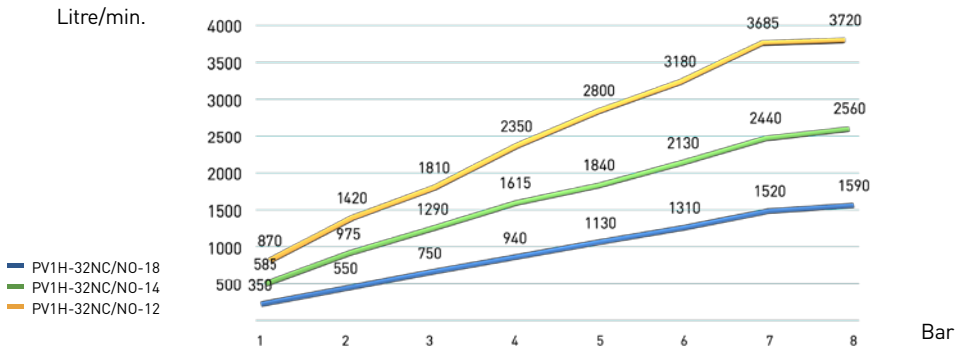

DIMENSIONS (mm)

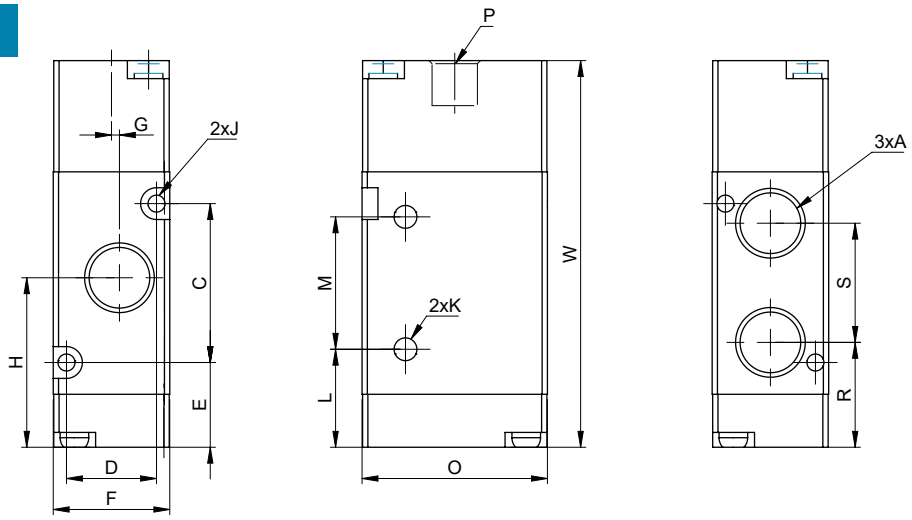

MODEL	A	C	D	E	F	G	H	J	K	L	M	O	P	R	S	W
PV1H-32NC-18	1/8"	19	13	16,5	18	1,5	27	3,3	3,1	15,5	21	27	1/8"	18	16	61
PV1H-32NC-14	1/4"	30	17	16	22	1,5	32	3,3	4,2	18,5	25	35	1/8"	19,8	22,5	73
PV1H-32NC-12	1/2"	40,5	27	24,8	34	2	45	4,3	5,2	21	48	50	1/8"	29,3	31,5	103

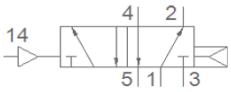

PV1 SERIES

5/2 AIR-SPRING VALVES

	Product Code		
	PV1H-52-18	PV1H-52-14	PV1H-52-12
General Technical Information			
Power Rating	3.0	3.0	3.0
Pilot Signal Type	Air	Air	Air / Spring
Maximum Operating Pressure	12		
Operating Temperature (°C)	-20 ...+80		
Operating Pressure (Bar)	1,5...8		
Recommended Air Quality (µm)	40		
Protection Class	IP65		
Cycle Frequency (s)	6 Cycles		
Activation Time	0,08		
Product Weight (g)	115	300	460

STANDARD FLOW GRAPH

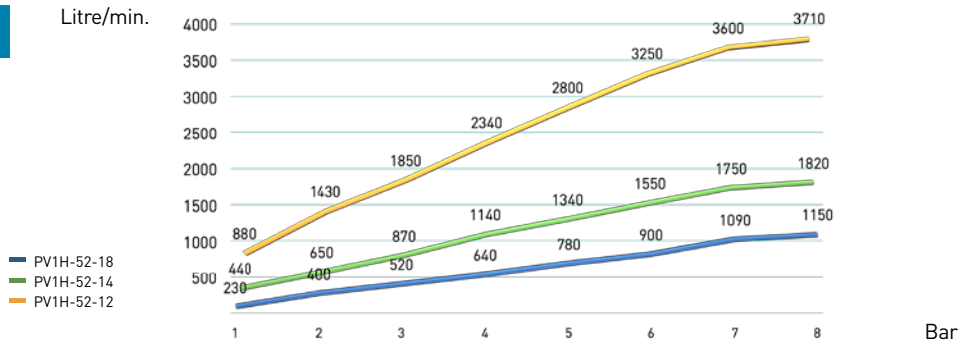

DIMENSIONS (mm)

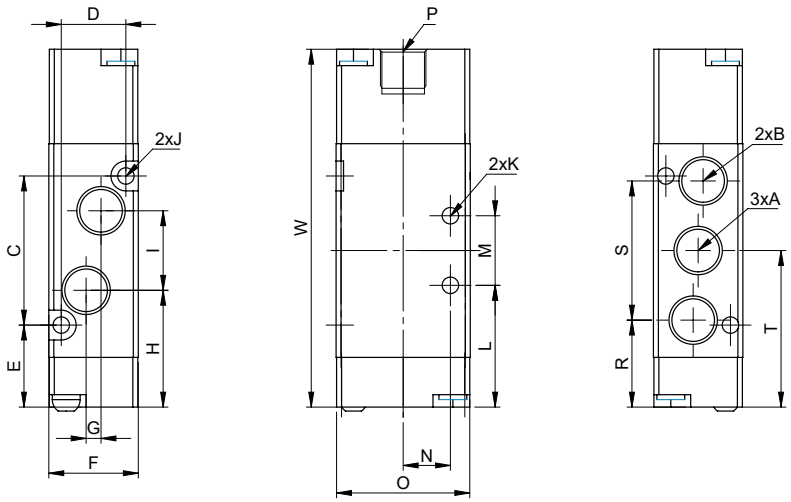

MODEL	A	B	C	D	E	F	G	H	I	J	K	L	M	N	O	P	R	S	T	W
PV1H-52-18	G1/8	G1/8	30	13	16,5	18	0	24,5	14,1	3,3	3,3	24,5	14	9,5	27	G1/8	17,9	27,2	31,5	72
PV1H-52-14	G1/4	G1/8	38	17	16	22	3	24,5	21	3,3	4,3	25	20	10,5	35	G1/8	17	36	35	81
PV1H-52-12	G1/2	G1/2	72	27	21	34	4	39	36	4,3	5,5	43	28	17,5	50	G1/8	25,5	63	57	127

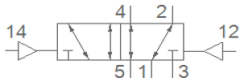

PV1 SERIES

5/2 AIR-AIR SIGNAL VALVES

Product Code

	PV1E-52D-18-V1	PV1E-52D-14-V1	PV1E-52D-12-V1
General Technical Information			
Power Rating	3.0	3.0	3.0
Pilot Signal Type	Air	Air	Air / Spring
Maximum Operating Pressure		12	
Operating Temperature (°C)		-20 ...+80	
Operating Pressure (Bar)		1,5...8	
Recommended Air Quality (µm)		40	
Protection Class		IP65	
Cycle Frequency (s)		6 Cycles	
Activation Time		0,08	
Product Weight (g)	115	300	460

STANDARD FLOW GRAPH

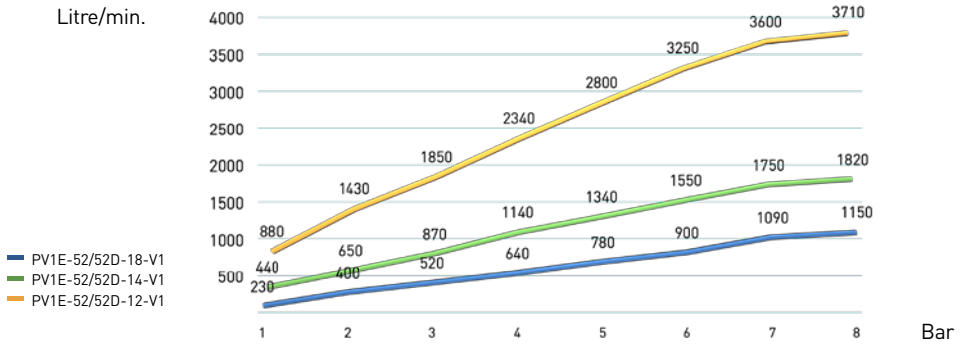

DIMENSIONS (mm)

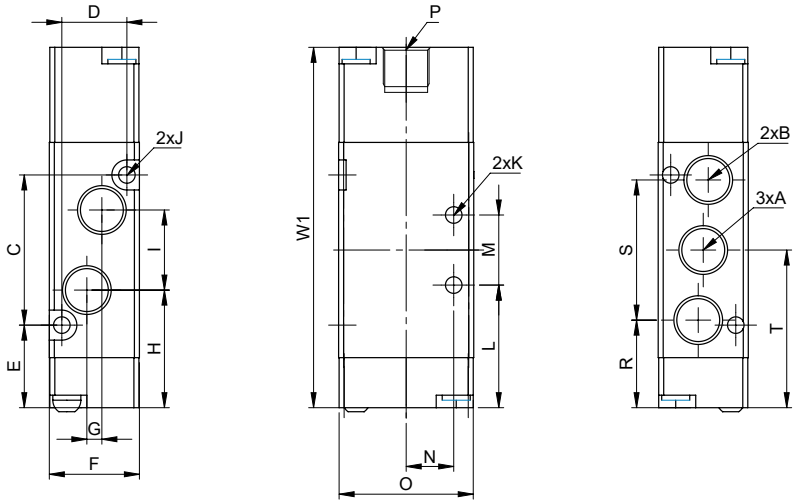

MODEL	A	B	C	D	E	F	G	H	I	J	K	L	M	N	O	P	R	S	T	W1
PV1H-52D-18	G1/8	G1/8	30	13	16,5	18	0	24,5	14,1	3,3	3,3	24,5	14	9,5	27	G1/8	17,9	27,2	31,5	81
PV1H-52D-14	G1/4	G1/8	38	17	16	22	3	24,5	21	3,3	4,3	25	20	10,5	35	G1/8	17	36	35	92
PV1H-52D-12	G1/2	G1/2	72	27	21	34	4	39	36	4,3	5,5	43	28	17,5	50	G1/8	25,5	63	57	140

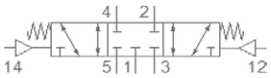

5/3 Closed Center
Air Signal Valve

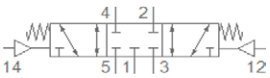

5/3 Exhaust Center
Air Signal Valve

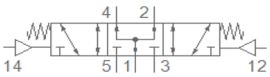

5/3 Pressure Center
Air Signal Valve

PV1 SERIES

5/3 VALVES

Product Code

	PV1H-53C/E/P-18	PV1H-53C/E/P-14	PV1H-53C/E/P-12
General Technical Information			
Power Rating	3.0	3.0	3.0
Pilot Signal Type	Air	Air	Air / Spring
Maximum Operating Pressure		12	
Operating Temperature (°C)		-20 ...+80	
Operating Pressure (Bar)		1,5...8	
Recommended Air Quality (µm)		40	
Protection Class		IP65	
Cycle Frequency (s)		6 Cycles	
Activation Time		0,08	
Product Weight (g)	115	300	460

STANDARD FLOW GRAPH

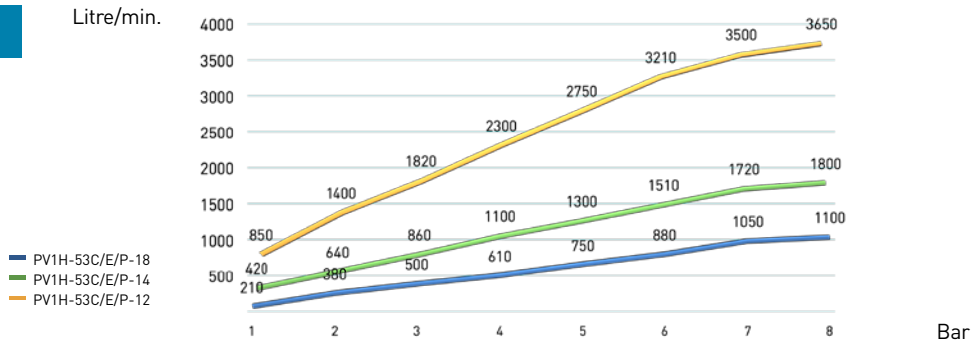

DIMENSIONS (mm)

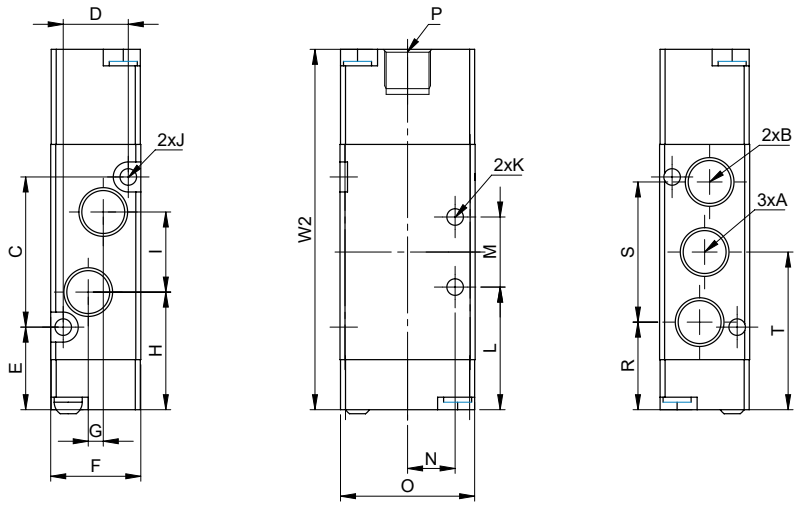

MODEL	A	B	C	D	E	F	G	H	I	J	K	L	M	N	O	P	R	S	T	W2
PV1H-53C-18	G1/8	G1/8	30	13	16,5	18	0	24,5	14,1	3,3	3,3	24,5	14	9,5	27	G1/8	17,9	27,2	31,5	96
PV1H-53C-14	G1/4	G1/8	38	17	16	22	3	24,5	21	3,3	4,3	25	20	10,5	35	G1/8	17	36	35	111
PV1H-53C-12	G1/2	G1/2	72	27	21	34	4	39	36	4,3	5,5	43	28	17,5	50	G1/8	25,5	63	57	161

PV1T SERIES

VALVE TERMINAL

- Compact Design
- Robust Body Structure
- Energy Saving with Low Power Consumption
- Long Lifetime with Special Coil Design
- Stability and Durability with Air&Spring Pilot Signal
- Multipin Cable Connection Feature
- Single Coil, Double Coil and 5/3 Closed Center Options

Order Sample: PV1T-52D-18-4-V1+3M

PV1T-	52D-	18-	4	V1	+ 3M
Product Series	**Function**	**Thread**	**Number of Valves**	**Voltage**	**Cable Length**
	S= 5/2 Single Coil	1/8''	4	V1= 24 V DC	3 M= 3 Metre
	D=5/2 Double Coil	1/4''	.		5 M= 5 Metre
	C= 5/3 Closed Center		.		
	K= Cover Plate		14		

DIMENSIONS (mm)

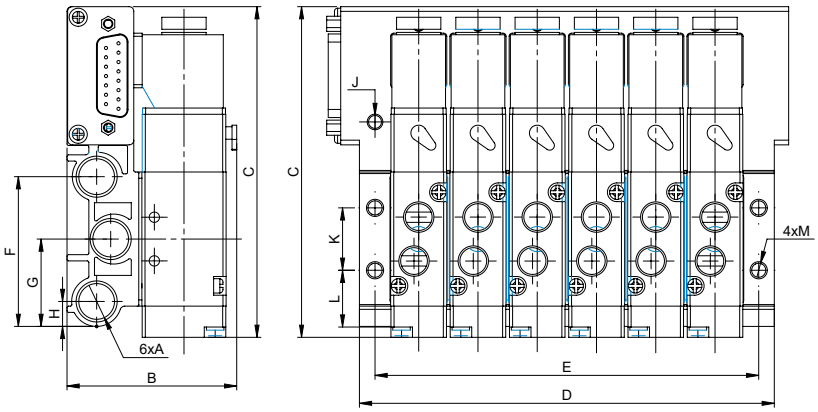

MODEL	A	B	C	F	G	H	J	K	L	M
PV1T-...-18	G1/8"	54,7	106	49	29	9	M5	20	19	4,5
PV1T-...-14	G1/4"	64	123,8	51,5	30,25	9	M5	21	19,75	4,5

MODEL		NUMBER OF VALVE SLICES											
		3	4	5	6	7	8	10	12	14	16	20	24
PV1T-...-18	E	66	85	104	123	142	161	199	237	275	313	389	465
	D	76	95	114	133	152	171	206	247	285	303	379	455
PV1T-...-14	E	80	103	126	149	172	195	241	287	333	379	471	563
	D	92	115	138	161	184	207	253	299	345	391	483	575

SOCKET CONNECTION DIAGRAMS

PV1 SERIES MULTIPIN VALVE TERMINAL
15 PINS- 15 WIRE SOCKET CONNECTION DIAGRAM

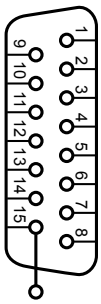

Pin No	Wire Colour	Valve	Explanation
1	Purple	1. Valve	Double Coil Valves Cover Two Slices
2	Orange	2. Valve	
3	Pembe	3. Valve	
4	Grey	4. Valve	
5	White	5. Valve	
6	Red	6. Valve	
7	Green	7. Valve	
8	Striped Black	8. Valve	
9	Striped Purple	9. Valve	
10	Striped Orange	10. Valve	
11	Striped Pink	11. Valve	
12	Striped Grey	12. Valve	
13	Striped White	13. Valve	
14	Striped Red	14. Valve	
15 (COM)	**Black**	**Common Terminal**	

PV1 SERIES MULTIPIN VALVE TERMINAL
15 PINS- 8 WIRE SOCKET CONNECTION DIAGRAM

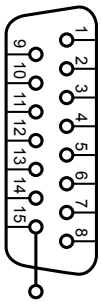

Pin No	Wire Colour	Valve	Explanation
1	Purple	1. Valve	Double Coil Valves Cover Two Slices
2	Orange	2. Valve	
3	Pink	3. Valve	
4	Grey	4. Valve	
5	White	5. Valve	
6	Red	6. Valve	
7	Green	7. Valve	
15 (COM)	**Black**	**Common Terminal**	

PV2 SERIES

VALVES

- Compact Body Design, Maximum Flow
- Energy Saving with Low Power Consumption
- Long Lifetime with Special Coil Design
- Stability and Durability with Air&Spring Pilot Signal
- Body Compatible with Individual Use and Valve Terminal Connection
- Integrated Led Indicator
- One-Way Cable Connection Advantage in Whole Series
- High Switching Frequency

Order Sample: PV2E-52D-M5

PV2-	E	52D-	M5
Product Series	**Signal Type**	**Function**	**Thread**
PV2	E= Electrical	2x32NC=3/2 Normally Closed	M5
		2x32NO=3/2 Normally Open	1/8'
		32NONC=3/2 Normally Open and Normally Closed	
		52= 5/2 Single Coil	
		52D=5/2 Double Coil	
		53C= 5/3 Closed Center	
		53E= 5/3 Exhaust Center	
		53P= 5/3 Pressure Center	

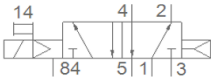

PV2 SERIES

5/2 SINGLE SOLENOID VALVE

	PV2E-52-M5	PV2E-52-18
General Technical Information		
Power Rating	0.8 W	
Pilot Signal Type	Air	
Maximum Operating Pressure	12 Bar	
Operating Temperature (°C)	-20°C .....+80°C	
Operating Pressure (Bar)	1,5...8	
Recommended Air Quality (µm)	40	
Protection Class	IP40	
Cycle Frequency (s)	20 ms	
Activation Time	6 Cycles	
Product Weight (g)	60	90

STANDARD FLOW GRAPH

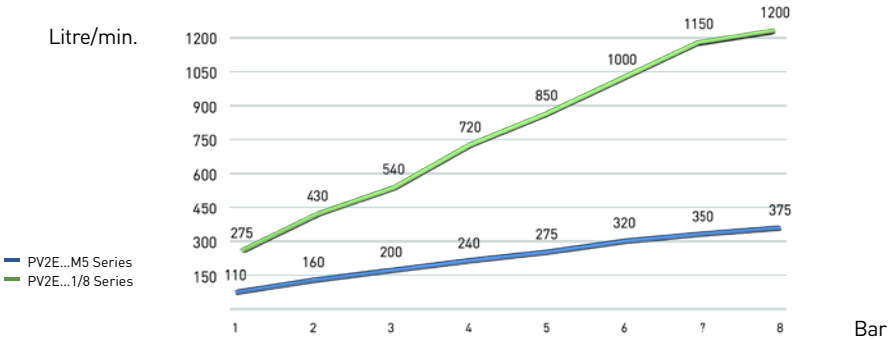

DIMENSIONS (mm)

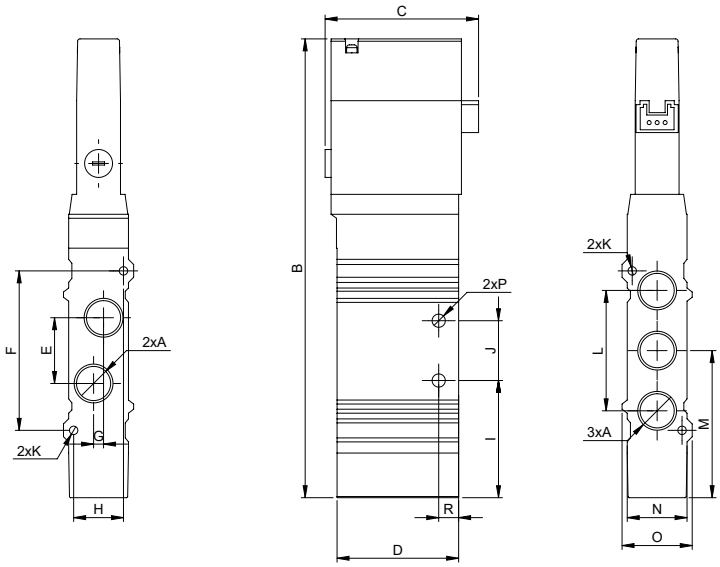

MODEL	A	B	C	D	E	F	G	H	I	J	K	L	M	N	O	P	R
PV2E-52-M5	M5	93,8	38,5	30,5	11	26	2	9,4	21,1	10,5	2,1	21	26,3	11	12,4	3,3	5
PV2E-52-18	1/8"	115,1	38,5	30,5	16,5	40	2,5	12,5	29,4	15	2,1	30,2	36,9	15	17,6	3,3	5

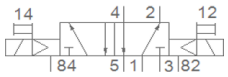

PV2 SERIES

5/2 DOUBLE SOLENOID VALVE

	PV2E-52D-M5	PV2E-52D-18
General Technical Information		
Power Rating	0.8 W	
Pilot Signal Type	Air	
Maximum Operating Pressure	12 Bar	
Operating Temperature (°C)	-20°C .....+80°C	
Operating Pressure (Bar)	1,5...8	
Recommended Air Quality (µm)	40	
Protection Class	IP40	
Cycle Frequency (s)	20 ms	
Activation Time	6 Cycles	
Product Weight (g)	65	100

STANDARD FLOW GRAPH

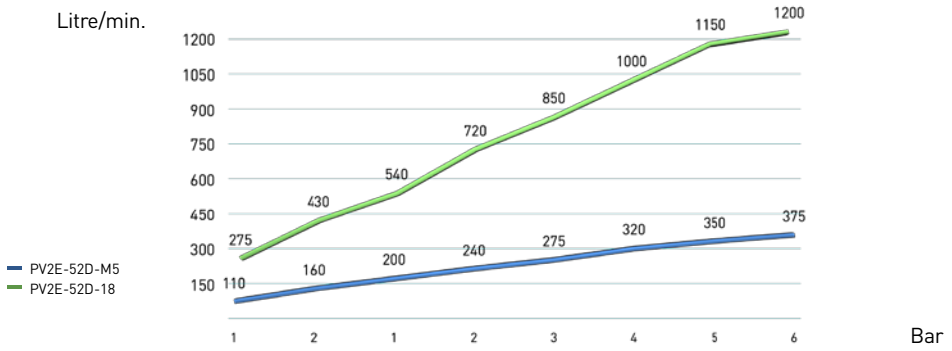

DIMENSIONS (mm)

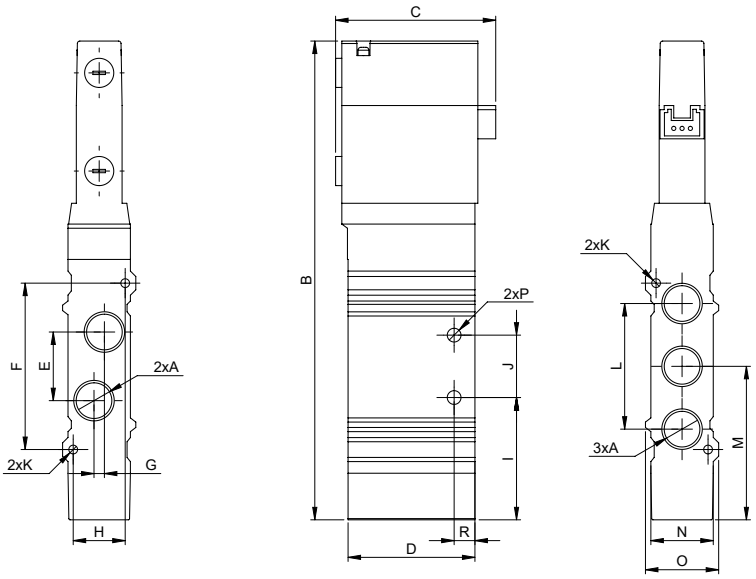

MODEL	A	B	C	D	E	F	G	H	I	J	K	L	M	N	O	P	R
PV2E-52D-M5	M5	93,8	38,5	30,5	11	26	2	9,4	21,1	10,5	2,1	21	26,3	11	12,4	3,3	5
PV2E-52D-18	1/8"	115,1	38,5	30,5	16,5	40	2,5	12,5	29,4	15	2,1	30,2	36,9	15	17,6	3,3	5

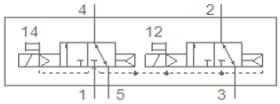

2x3/2 Normally Closed Valve

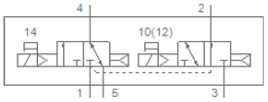

3/2 Normally Closed + 3/2 Normally Open

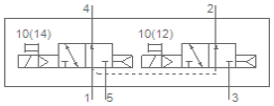

2x3/2 Normally Open Valve

PV2 SERIES

2x3/2 VALVES

	PV2E-2x3/2-M5	PV2E-2x3/2-18
General Technical Information		
Power Rating	0.8 W	
Pilot Signal Type	Air	
Maximum Operating Pressure	12 Bar	
Operating Temperature (°C)	-20°C .....+80°C	
Operating Pressure (Bar)	1,5...8	
Recommended Air Quality (µm)	40	
Protection Class	IP40	
Cycle Frequency (s)	20 ms	
Activation Time	6 Cycles	
Product Weight (g)	65	100

STANDARD FLOW GRAPH

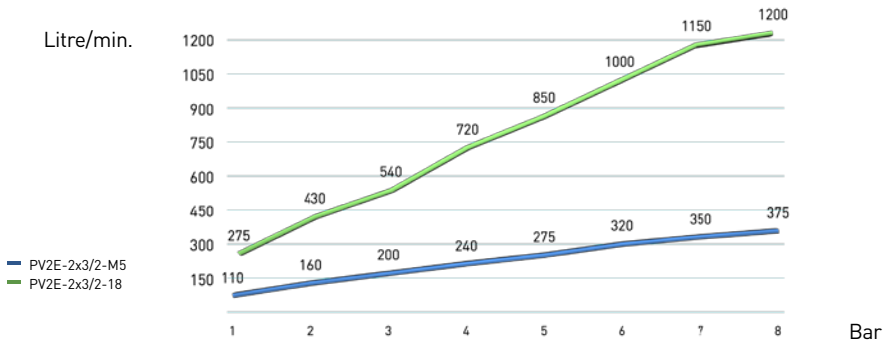

DIMENSIONS (mm)

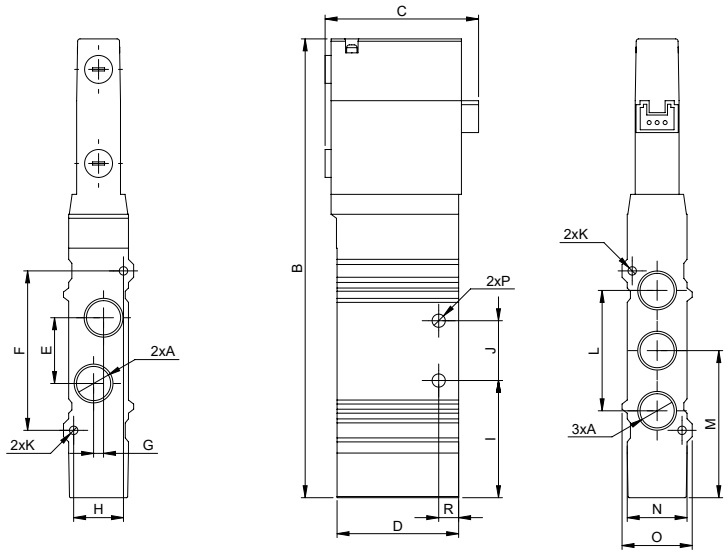

MODEL	A	B	C	D	E	F	G	H	I	J	K	L	M	N	O	P	R
PV2E-2x3/2-M5	M5	93,8	38,5	30,5	11	26	2	9,4	21,1	10,5	2,1	21	26,3	11	12,4	3,3	5
PV2E-2x3/2-18	1/8"	115,1	38,5	30,5	16,5	40	2,5	12,5	29,4	15	2,1	30,2	36,9	15	17,6	3,3	5

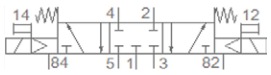

5/3 Closed Center Valve

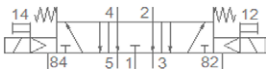

5/3 Exhaust Center Valve

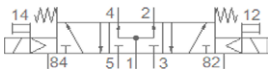

5/3 Pressure Center Valve

PV2 SERIES

5/3 VALVES

	PV2E-53C/E/P-M5	PV2E-53C/E/P-18
General Technical Information		
Power Rating	0.8 W	
Pilot Signal Type	Air	
Maximum Operating Pressure	12 Bar	
Operating Temperature (°C)	-20°C .....+80°C	
Operating Pressure (Bar)	1,5...8	
Recommended Air Quality (µm)	40	
Protection Class	IP40	
Cycle Frequency (s)	20 ms	
Activation Time	6 Cycles	
Product Weight (g)	70	110

STANDARD FLOW GRAPH

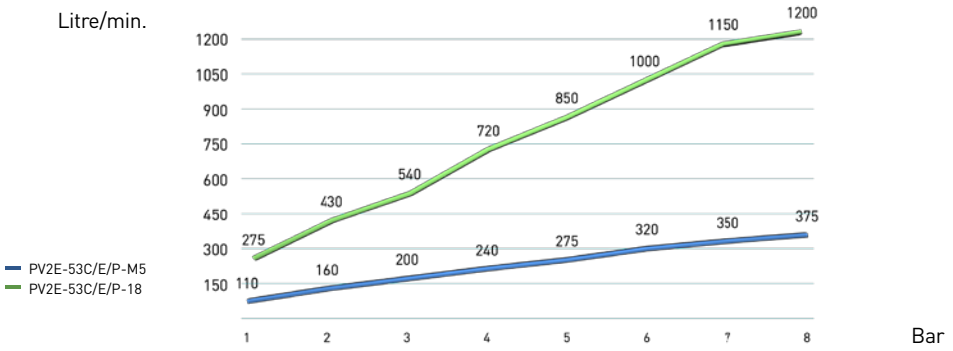

DIMENSIONS (mm)

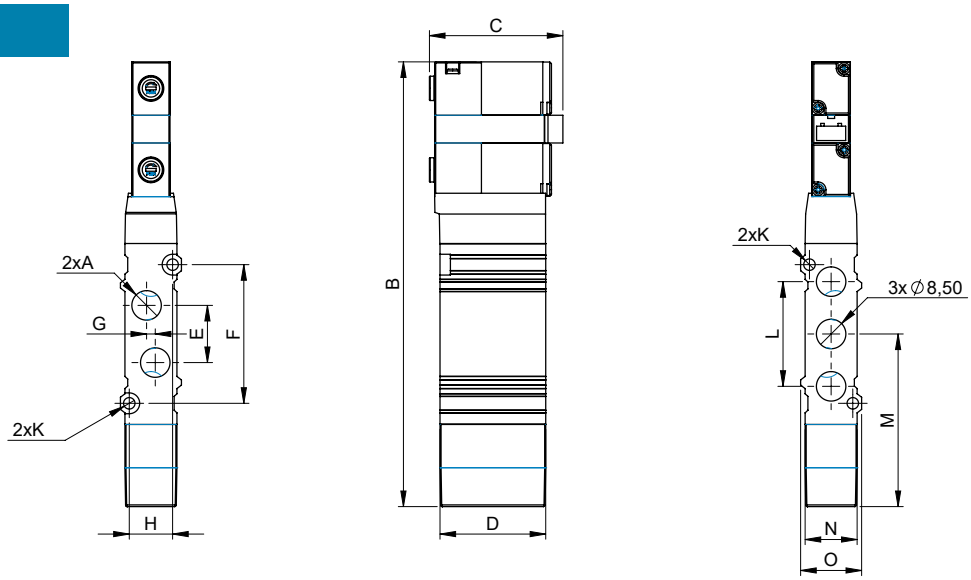

MODEL	A	B	C	D	E	F	G	H	K	L	M	N	O
PV2E-53C-M5	M5	102,8	38,5	30,5	11	26	2	9,4	2,1	21	35,3	11	12,4
PV2E-53C-18	1/8"	128,3	38,5	30,5	16,5	40	2,5	9,4	3,3	30,2	49,8	15	17,6

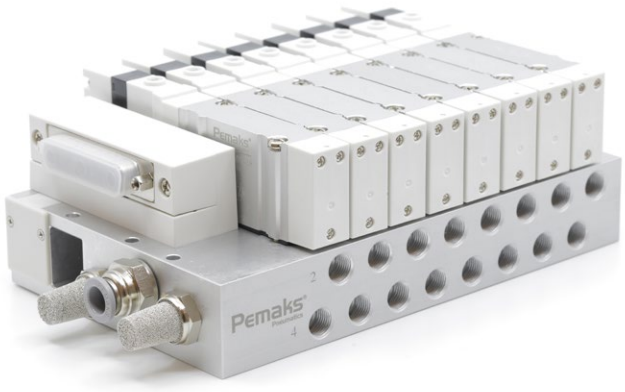

PV2T SERIES

VALVE TERMINAL

- Compact Body Design, Maximum Flow
- Energy Saving with Low Power Consumption
- Long Lifetime with Special Coil Design
- Stability and Durability with Air&Spring Pilot Signal
- High Switching Frequency
- 2x3/2 Valve Advantage in One Body
- Multipin Socket Structure Suitable for Positioning at Different Angles

Order Sample: PV2T-8-52D-M5-V1+3M

PV2T-	8	52D-	M5-	V1	+ 3M
Product Series	**Number of Valves**	**Function**	**Thread**	**Voltage**	**Cable Length**
PV2T-	4	N=2x3/2 Normally Closed	M5	V1= 24 V DC	3 M= 3 Metre
	5	O=2x3/2 Normally Open	1/8''		5 M= 5 Metre
	.	W=3/2 Normally Open and Normally Closed			
	.	S= 5/2 Single Coil			
	.	D=5/2 Double Coil			
		C= 5/3 Closed Center			
		E= 5/3 Exhaust Center			
	24	P= 5/3 Pressure Center			
		K= Cover Plate			

DIMENSIONS (mm)

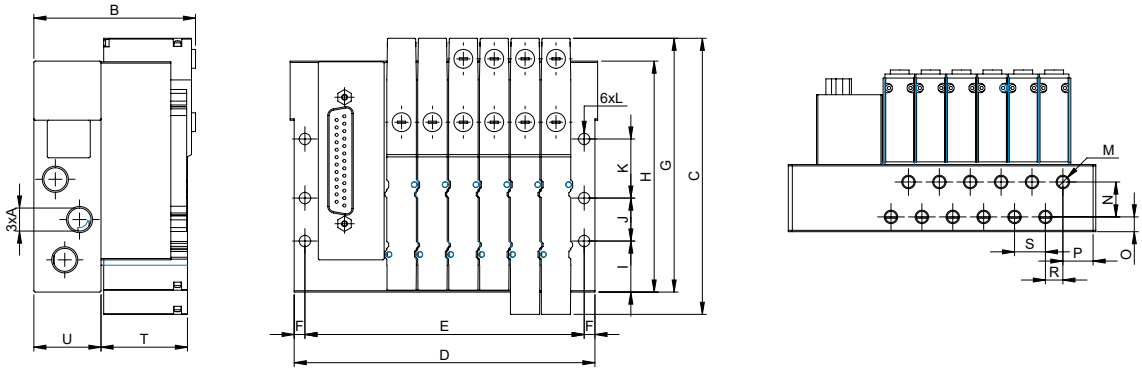

MODEL	A	B	C	F	G	H	I	J	K	L	M	N	O	P	R	S	T	U
PV2T-...-M5	G1/8"	59,5	102,8	4	94,5	86	19	16	22	4,2	M5	13	5,5	11,25	6,5	11,5	31,5	25
PV2T-...-18	G1/4"	64,3	127,6	4	119,1	106,7	27	20	30	4,3	G1/8"	15,4	7,3	12,5	8	16	31,5	29,8

MODEL		NUMBER OF VALVE SLICES											
		3	4	5	6	7	8	10	12	14	16	20	24
PV2T-...-M5	E	69,5	81	92,5	104	115,5	127	150	173	196	219	265	311
	D	77,5	89	100,5	112	123,5	135	158	181	204	227	273	319
PV2T-...-18	E	83	99	115	131	147	163	195	227	259	291	355	419
	D	91	107	123	139	155	171	203	235	267	299	363	427

SOCKET CONNECTION DIAGRAMS

PV2 SERIES MULTIPIN VALVE TERMINAL // 25 PINS - 25 WIRE SOCKET CONNECTION DIAGRAM

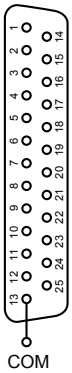

Pin No	Wire Colour	Valve	Coil
1	Purple	1. Valve	1. Coil
2	Orange	2. Valve	1. Coil
3	Pink	3. Valve	1. Coil
4	Grey	4. Valve	1. Coil
5	White	5. Valve	1. Coil
6	Redı	6. Valve	1. Coil
7	Green	7. Valve	1. Coil
8	Black	8. Valve	1. Coil
9	Single Striped Purple	9. Valve	1. Coil
10	Single Striped Orange	10. Valve	1. Coil
11	Single Striped Pink	11. Valve	1. Coil
12	Single Striped Grey	12. Valve	1. Coil
13 (COM)	Yellow	Common Terminal	
14	Single Striped White	1. Valve	2. Coil
15	Single Striped Red	2. Valve	2. Coil
16	Single Striped Green	3. Valve	2. Coil
17	Single Striped Black	4. Valve	2. Coil
18	Double Striped Purple	5. Valve	2. Coil
19	Double Striped Orange	6. Valve	2. Coil
20	Double Striped Pink	7. Valve	2. Coil
21	Double Striped Grey	8. Valve	2. Coil
22	Double Striped White	9. Valve	2. Coil
23	Double Striped Red	10. Valve	2. Coil
24	Double Striped Green	11. Valve	2. Coil
25	Double Striped Black	12. Valve	2. Coil

PV2 SERIES MULTIPIN VALVE TERMINAL // 25 PINS - 16 WIRE SOCKET CONNECTION DIAGRAM

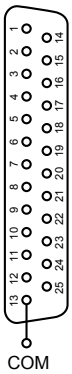

Pin No	Wire Colour	Valve	Coil
1	Purple	1. Valve	1. Coil
2	Orange	2. Valve	1. Coil
3	Pink	3. Valve	1. Coil
4	Grey	4. Valve	1. Coil
5	White	5. Valve	1. Coil
6	Red	6. Valve	1. Coil
7	Green	7. Valve	1. Coil
8	Striped Black	8. Valve	1. Coil
9	Striped Purple	9. Valve	1. Coil
10	Striped Orange	10. Valve	1. Coil
11	Striped Pink	11. Valve	1. Coil
12	Striped Grey	12. Valve	1. Coil
13 (COM)	Black	Common Terminal	
14	Striped White	1. Valve	2. Coil
15	Striped Red	2. Valve	2. Coil
16	Striped Green	3. Valve	2. Coil

PV2 SERIES MULTIPIN VALVE TERMINAL // 25 PINS - 8 WIRE SOCKET CONNECTION DIAGRAM

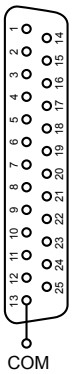

Pin No	Cable Colour	Valve	Coil
1	Purple	1. Valve	1. Coil
2	Orange	2. Valve	1. Coil
3	Pink	3. Valve	1. Coil
4	Grey	4. Valve	1. Coil
5	White	5. Valve	1. Coil
6	Red	6. Valve	1. Coil
7	Green	7. Valve	1. Coil
13 (COM)	Black	Common Terminal	

PEMAKS NOW ON SOCIAL MEDIA

FOLLOW OUR SOCIAL MEDIA ACCOUNTS FOR
DEVELOPMENTS, NEW PRODUCTS AND SOLUTIONS.

Pemaks®
Pneumatics
pemaks.com.tr

Çerkeşli OSB Mahallesi İMES 10. Cad. No: 9, 41455 Dilovası, Kocaeli Tel: +90 262 503 3000
www.pemaks.com.tr - sales@pemaks.com.tr